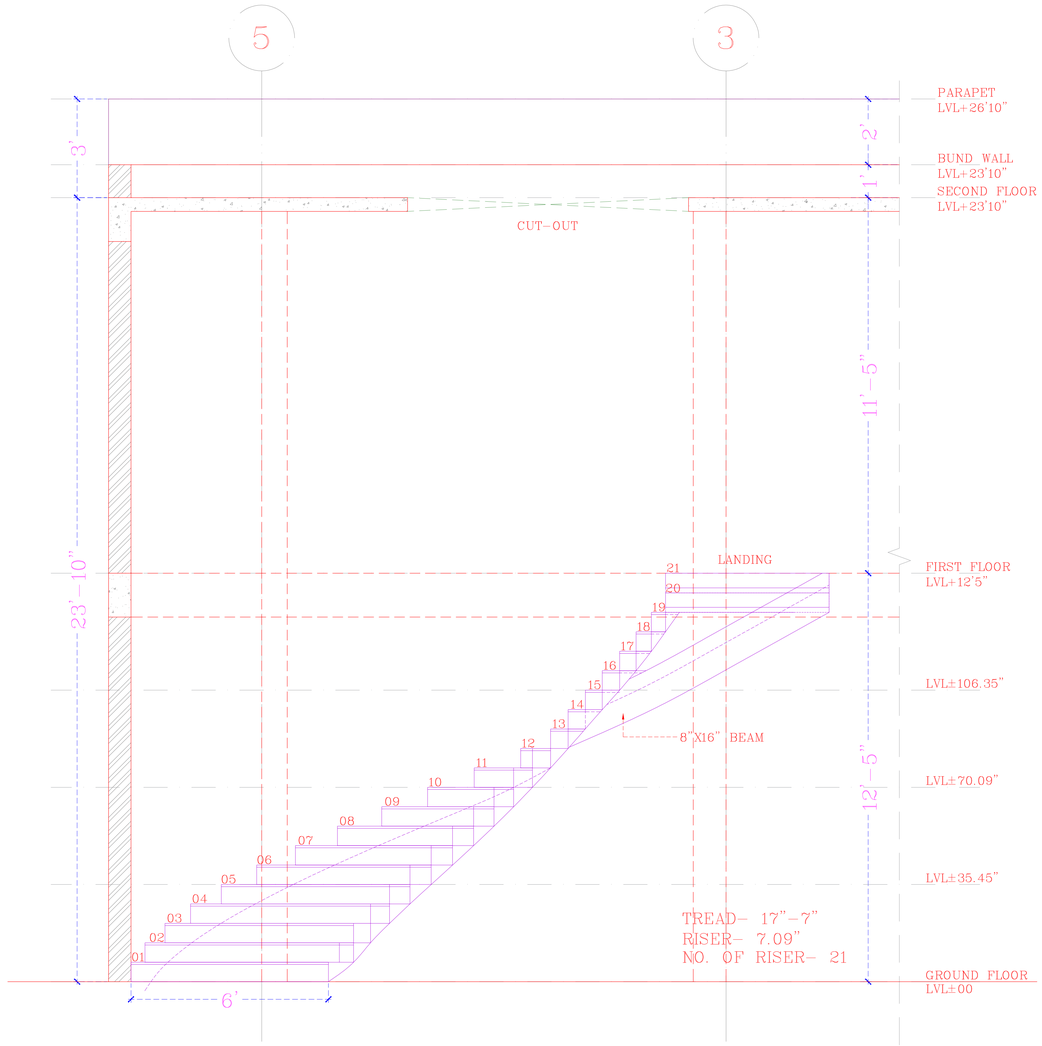

STAIRCASE DETAIL ELEVATION AA'

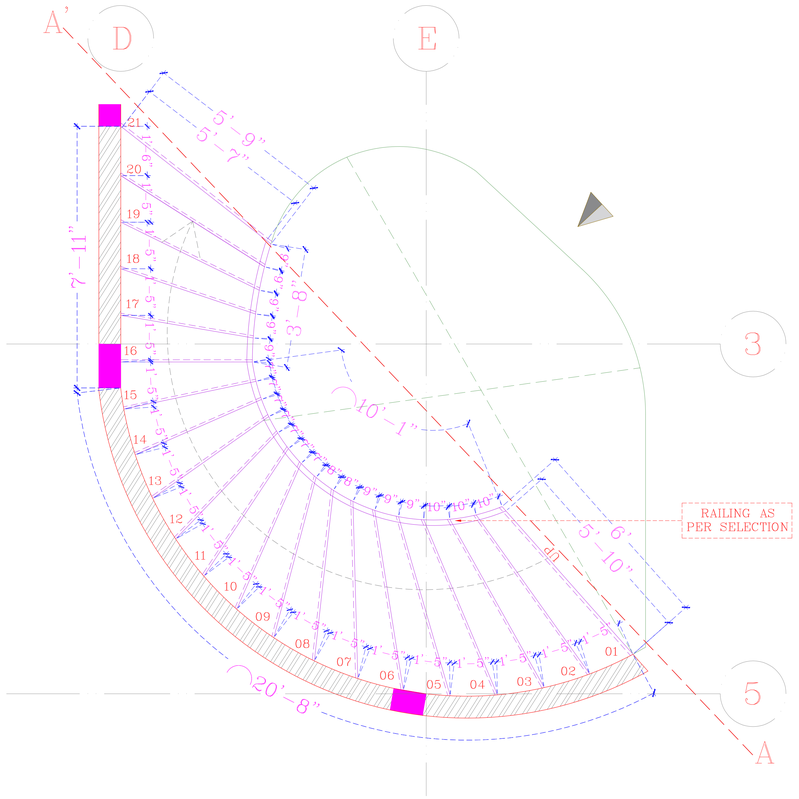

STAIRCASE PLAN GROUND
TO FIRST FLOOR

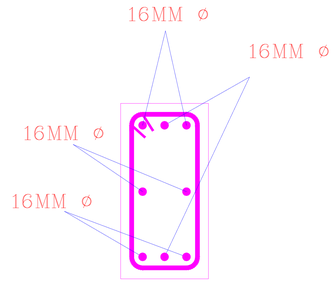

STAIRCASE BEAM
REINFORCEMENT
DETAIL

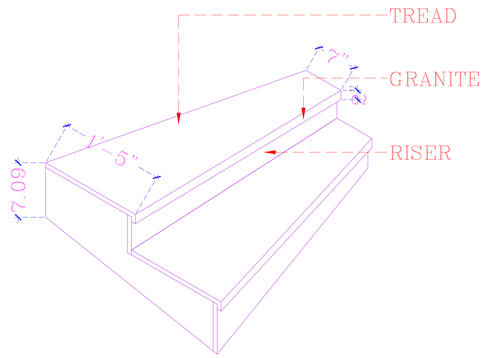

TYPICAL VIEW

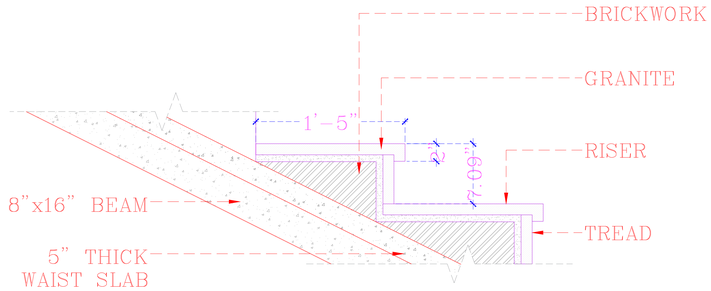

TYPICAL DETAIL SECTION

STAIRCASE BEAM REINFORCEMENT DETAIL							
TYPE	BEAM SIZE	STEEL					RING
		BOTTOM	TOP	CENTER	BOTTOM EXTRA	TOP EXTRA	
B	8" X 16"	2-16MM ø	2-16MM ø	2-16MM ø	1-16MM ø	1-16MM ø	8MM ø @150MM C/C

STAIRCASE DETAIL

PROPOSED LAYOUT FOR
MR. SANJAY JI

DESIGNED BY: AR. EKTA MISHRA

A4 A R C H I T E C T

NORTH